CONFIGURATION

Hydraulic Gearbox	Tilting Cylinder Latching Valve
Mechanical Reversing	Combination Instrument
Overhead Guard	Working Hour Meter
Top Rain Shelter	Oil Content Meter
Pedal Rubber	Water-thermometer
Semi-suspension Seat	Charging Indicator
Wide Field Mast (2 Stage)	Neutral Position Switch
Fork Carriage	Oil Pressure Warning
Backrest	Electric Horn
Standard Forks	LED Signal Lamp
Adjustable Steering Column	Reversing Buzzer
Lifting and Tilting Joysticks	Backup Mirror
Two Piece Multiplex Valve	Traction Pin
Full-hydraulic Power Steering	Tool Box

OPTIONAL

Mechanical Gearbox	Fire Extinguishing Muffler
Electric Reversing (3/3.5T)	Full Set LED Lamps
Solid Tires	Reversing Voice Horn
Cabin	Electric Fan
Working Warning Light	Sound-light Alarm
Suspension Seat	Rear Working Lamp
Cold A/C (with cabin)	Widen Fork Frame
Warm-air Blower (with cabin)	Lengthen Fork Jacket
Front Windscreen	Tilting Cylinder Sleeve
High Level Exhaust	Steering Cylinder Sleeve
Double Air Filter	Custom Colors
Oil Bath Air Filter	Multiple Work Attachments

PRODUCT FEATURES

High Stability New dynamic counterweight design technology makes the center of gravity move backward, which improves load capacity and safety of loaded driving greatly.
Energy Efficiency Optimized design of cooling system and air duct. Cyclone air filter with large flow.
Operating Comfort Adopted interactive ergonomic design to improve operating comfort. Equipped with wide field of view mast to improve driver's field of view.
Well-adapted Steering wheel can be adjusted at a large Angle to meet different driving needs.
Convenient Maintenance Interior space of car body is more spacious Parts Positions are more reasonable. Maintainability of machine is better.
Safety and Reliable Overall design frame and overhead guard with integral welded, Reduce vibration of whole machine and enhance frame strength.

FF15D

FF20/25/30/35/38D

The following blank can be used for notes or comments.

2020/04

LOVOL

FF15/20/25/30/35/38D

BALANCEWEIGHT TYPE FORKLIFT TRUCK WITH ENGINE

Efficiency Rules the Future

	FF15D	FF20D	FF25D	FF30D	FF35D	FF38D
Rated Capacity (kg)	1500	2000	2500	3000	3500	3800
Load Center (mm)	500	500	500	500	500	500
Power Type	Diesel	Diesel	Diesel	Diesel	Diesel	Diesel

OVERALL SPECIFICATIONS

Type	No.	Item	Code	Unit	Data					
Identification	1.01	Manufacturer			LOVOL					
	1.02	Model			FD15D	FF20D	FF25D	FF30D	FF35D	FF38D
	1.03	Power type			Diesel					
	1.04	Rated capacity	Q	kg	1500	2000	2500	3000	3500	3800
	1.05	Load center	J	mm	500	500	500	500	500	500
Dimensions	2.01	STD Max height (with backrest)		mm	3906	3935	3935	4272	4210	4210
	2.02	STD Max lifting height	h1	mm	3000	3000	3000	3000	3000	3000
	2.03	Overhead guard height	h4	mm	2090	2110	2110	2130	2130	2140
	2.04	Overall length (with fork)	L1	mm	3180	3590	3650	3850	3900	3995
	2.05	Wheelbase	L2	mm	1400	1650	1650	1760	1760	1900
	2.06	Front overhang	L3	mm	410	460	460	480	496	496
	2.07	Rear overhang	L4	mm	425	410	470	540	570	530
	2.08	Min.ground clearance (Frame/Mast)	m1/m2	mm	100/105	150/110	150/110	160/130	160/130	180/150
	2.09	Overall width	W1	mm	1090	1160	1160	1240	1240	1290
	2.10	Adjusting range of fork (outside)		mm	226-970	240-1040	240-1040	255-1095	255-1095	300-1160
	2.11	STD Fork size (L5*W*T)		mm	920×100×35	1070×120×40		1070×122×45	1070×122×50	1070×150×50
	2.12	Front wheel tread	S	mm	890	970	970	1000	1000	1040
	2.13	Rear wheel tread	P	mm	870	980	980	980	980	985
	2.14	Min.turning radius	R1	mm	1950	2250	2300	2400	2420	2620
	2.15	Min aisle width for pallet 1000×1200,crossways		mm	3630	3900	3970	4215	4260	4335
	2.16	Min aisle width for pallet 800×1200,lengthways		mm	3760	4150	4160	4350	4390	4515
Tires	3.01	Wheels number, front/rear (X=driven wheels)			X=2/2					
	3.02	Tires type			Pneumatic					
	3.03	Tires size, front			6.5-10-10PR	7.00-12-12PR		28×9-15-14PR		250-15-16PR
	3.04	Tires size, rear			5.00-8-10PR	6.00-9-10PR		6.50-10-10PR		6.5-10-10PR
Other Details	4.01	Max.traveling speed, loaded/unloaded		km/h	14/15	18/20	18/20	18.5/20	18.5/20	23/24
	4.02	Max.lifting speed, loaded/unloaded		mm/s	480/500	530/550	530/550	485/505	380/400	380/400
	4.03	Lowering speed, loaded/unloaded		mm/s	Loaded≤600/Unloaded≥300					
	4.04	Max.gradient, loaded/unloaded		%	20	20	20	20	20	20/15
	4.05	STD operating weight (with oil & water)		kg	2680	3420	3770	4220	4650	5000
	4.06	Axles loading,front/rear (loaded)		kg	3760/420	4725/525	5643/627	6620/650	7265/865	7920/880
	4.07	Axles loading,front/rear (unloaded)		kg	1072/1608	1300/1950	1508/2262	1724/2546	1760/2870	2001/2999
	4.08	Service brake			Power brake-pedal					
	4.09	Parking brake			Mechanical-hand brake lever					
	4.10	Drive type			Hydraulic gearbox with mechanical reversing					
	4.11	Fuel tank capacity		L	41	50	50	60	60	80
	4.12	Battery votage/capacity		V/Ah	12/60	12/80				

ENGINE OPTIONAL

Engine Model	Emission	Manufacturer	Rated Power	Max.Torque(N.m/rpm)	Bore/Cylinders Number/Displacement	Fuel Consumption	Applicable
NC485BPG	CHN Ⅱ	XINCHAI	30kW/2600rpm	131/1800	85mm/4/2.27L	235g/kW.h	1.5T
B02-082	CHN Ⅲ	QUANCHAI	31kW/2600rpm	131/1700-1900	85mm/4/2.3L	235g/kW.h	1.5T
4N23G31-002	CHN Ⅲ	XINCHAI	30kW/2600rpm	131/1700-1900	85mm/4/2.27L	245g/kW.h	1.5T
C240	Euro ⅢA	ISUZU	35.4kW/2500rpm	139.2/1800	86mm/4/2.369L	292g/kW.h	1.5T
C490BPG-47	Euro ⅢA	XINCHAI	36.8(36.7)kW/2650rpm	156/1800	90mm/4/2.67L	230g/kW.h	2-3T
C490BPG-225	CHN Ⅱ	XINCHAI	40(36.7)kW/2650rpm	156/1800	90mm/4/2.67L	230g/kW.h	2-3.8T
A498BT1-58	Euro ⅢA	XINCHAI	36.8(36.7)kW/2400rpm	180/1500-1800	98mm/4/3.168L	230g/kW.h	3.8T
4D30G31	CHN Ⅲ	XINCHAI	36.8kW/2500rpm	174/1800-2000	95mm/4/2.97L	230g/kW.h	3.8T

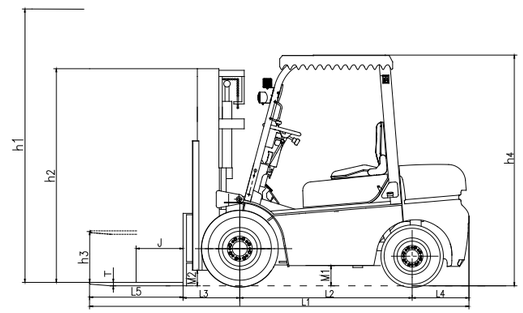

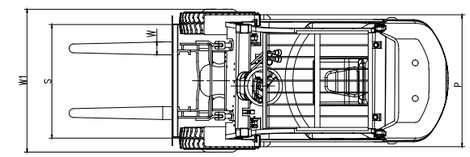

MAST SPECIFICATIONS

2 Stage Standard Mast-Super Wide Field

Mast Model	h1 Max Lifting Height(mm)	Load Capacity (J=500mm)（kg）						h2 Lowered Mast Height (mm)					h3 Free Lifting Height, without backrest (mm)					Mast tilt α/β (°)	
		1.5T	2T	2.5T	3T	3.5T	3.8T	1.5T	2-2.5T	3T	3.5T	3.8T	1.5T	2-2.5T	3T	3.5T	3.8T	1.5T	2-3.8T
M200	2000	1500	2000	2500	3000	3500	3800	1487	1500	1555	1670	1690	105	150	145	150	150	6/12	6/12
M225	2250	1500	/	/	/	/	/	1612	/	/	/	/	105	/	/	/	/	6/12	/
M250	2500	1500	2000	2500	3000	3500	3800	1737	1750	1805	1920	1940	105	150	145	150	150	6/12	6/12
M270	2700	/	2000	2500	3000	3500	3800	/	1850	1905	2020	2040	/	150	145	150	150	/	6/12
M275	2750	1500	/	/	/	/	/	1862	/	/	/	/	105	/	/	/	/	6/12	6/12
M300	**3000**	**1500**	**2000**	**2500**	**3000**	**3500**	**3800**	**1987**	**2000**	**2055**	**2170**	**2190**	**105**	**150**	**145**	**150**	**150**	**6/12**	**6/12**
M330	3300	1500	2000	2500	3000	3500	3800	2137	2150	2205	2320	2340	105	150	145	150	150	6/12	6/12
M350	3500	1500	2000	2500	3000	3500	3800	2237	2250	2305	2420	2440	105	150	145	150	150	6/12	6/12
M370	3700	/	2000	2500	3000	3500	3800	/	2350	2405	2520	2540	/	150	145	150	150	/	6/12
M375	3750	1500	/	/	/	/	/	2362	/	/	/	/	105	/	/	/	/	6/12	6/12
M400	4000	1400	2000	2500	2950	3200*3400	3600*3700	2537	2550	2605	2720	2740	105	150	145	150	150	6/6	6/8
M425	4250	1300	1850*2000	2250*2500	2850*3000	3100*3300	3350*3600	2662	2675	2730	2845	2865	105	150	145	150	150	6/6	6/8
M450	4500	1200	1600*1900	2100*2400	2600*2800	2900*3100	3100*3500	2787	2800	2855	2970	2990	105	150	145	150	150	6/6	6/8
M475	4750	1100	1400*1800	1900*2200	2350*2600	2700*2900	2900*3300	2912	2925	2980	3095	3115	105	150	145	150	150	6/6	6/8
M500	5000	1000	1300*1700	1600*1900	2100*2400	2400*2750	2700*3100	3037	3050	3105	3220	3240	105	150	145	150	150	6/6	6/8
M550	5500	800	1200*1500	1200*1700	2000*2400	2200*2400	2350*2700	3337	3350	3405	3520	3540	105	150	145	150	150	3/6	3/6
M600	6000	500	1000*1300	900*1400	1500*2000	*2200	1900*2350	3587	3600	3655	3770	3790	105	150	145	150	150	3/6	3/6

Note:"*" means capacity of double front wheels.

2 Stage Free Mast-Super Free Lifting Height

Mast Model	h1 Max Lifting Height(mm)	Load Capacity (J=500mm)（kg）						h2 Lowered Mast Height (mm)					h3 Free Lifting Height, without backrest (mm)					Mast tilt α/β (°)	
		1.5T	2T	2.5T	3T	3.5T	3.8T	1.5T	2-2.5T	3T	3.5T	3.8T	1.5T	2-2.5T	3T	3.5T	3.8T	1.5T	2-3.8T
ZM200	2000	1500	2000	2500	3000	3500	3800	1595	1555	1590	1690	1710	1037	1050	830	875	875	6/12	6/12
ZM250	2500	1500	2000	2500	3000	3500	3800	1845	1805	1840	1940	1960	1287	1300	1080	1125	1125	6/12	6/12
ZM270	2700	/	2000	2500	3000	3500	3800	/	1905	1940	2040	2060	/	1400	1180	1225	1225	/	6/12
ZM275	2750	1500	2000	2500	/	/	/	1970	/	/	/	/	1412	/	/	/	/	6/12	/
ZM300	**3000**	**1500**	**2000**	**2500**	**3000**	**3500**	**3800**	**2095**	**2055**	**2090**	**2190**	**2210**	**1537**	**1550**	**1330**	**1375**	**1375**	**6/12**	**6/12**
ZM330	3300	1500	2000	2500	3000	3500	3800	2245	2205	2240	2340	2360	1687	1700	1480	1525	1525	6/12	6/12
ZM350	3500	1500	2000	2500	3000	3500	3800	2345	2305	2340	2440	2460	1787	1800	1580	1625	1625	6/6	6/12
ZM370	3700	/	/	/	3000	3500	3650*3800	/	/	2440	2540	2560	/	/	/	1725	1725	/	6/12
ZM375	3750	1500	2000	2500	/	/	/	2470	2430	/	/	/	1912	1925	1680	/	/	6/6	6/12
ZM400	4000	1400	2000	2500	2850	3250*3500	3550*3700	2645	2605	2640	2740	2760	2087	2100	1880	1925	1925	6/6	6/8
ZM450	4500	1200	1600*1900	2100*2400	/	/	/	2895	2855	/	/	/	2337	2350	/	/	/	6/6	6/8

Note:"*" means capacity of double front wheels. 1.5T free lifting height reduces 346mm with backrest. 2-2.5T free lifting height reduces 430mm with backrest. 3T free lifting height reduces 520mm with backrest. 3.5T free lifting height reduces 454mm with backrest. 3.8T free lifting height reduces 435mm with backrest.

3 Stage Free Mast-Super Free Lifting Height

Mast Model	h1 Max Lifting Height(mm)	Load Capacity (J=500mm)（kg）						h2 Lowered Mast Height (mm)					h3 Free Lifting Height, without backrest (mm)					Mast tilt α/β (°)	
		1.5T	2T	2.5T	3T	3.5T	3.8T	1.5T	2-2.5T	3T	3.5T	3.8T	1.5T	2-2.5T	3T	3.5T	3.8T	1.5T	2-3.8T
ZSM360	3600	/	1900	2400	2900	3300	3700*3800	/	1805	1870	1870	1890	/	1240	1075	1080	1080	/	6/12
ZSM400	4000	1400	1800*1900	2300	2800	3300	3500*3700	1920	1930	2005	2005	2025	1362	1365	1210	1215	1215	6/6	6/8
ZSM435	4350	1300	1750*1900	2200*2400	/	/	/	2055	2055	/	/	/	1497	1490	/	/	/	6/6	6/8
ZSM450	**4500**	**1200**	**1600*1800**	**2000*2300**	**2500*2700**	**2800*3000**	**3100*3550**	**2095**	**2118**	**2170**	**2170**	**2195**	**1537**	**1553**	**1375**	**1380**	**1380**	**6/6**	**6/8**
ZSM470	4700	/	1300*1700	1800*2100	/	/	/	/	2183	/	/	/	/	1618	/	/	/	/	6/8
ZSM480	4800	1100	1250*1700	1700*2000	2250*2450	2500*2750	2800*3150	2195	2205	2270	2270	2290	1637	1640	1475	1480	1480	6/6	6/8
ZSM500	5000	950	1100*1600	1500*1800	2100*2300	2300*2600	2600*3100	2295	2305	2335	2335	2355	1737	1740	1540	1545	1545	6/6	6/8
ZSM540	5400	850	900*1400	1200*1600	/	/	/	2420	2430	/	/	/	1862	1865	/	/	/	3/6	3/6
ZSM550	5500	750	800*1300	1100*1500	1500*2000	1700*2200	2350*2800	2455	2470	2500	2500	2520	1897	1905	1705	1710	1710	3/6	3/6
ZSM600	6000	450	600*1100	800*1300	1200*1800	1300*2000	1650*2550	2645	2655	2720	2720	2740	2087	2090	1925	1930	1930	3/6	3/6
ZSM650	6500	200	400*800	600*1000	900*1500	1000*1600	*1800	2835	2870	2910	2910	2930	2277	2305	2115	2120	2120	3/3	3/3

Note:"*" means capacity of double front wheels. 1.5T free lifting height reduces 346mm with backrest. 2-2.5T free lifting height reduces 370mm with backrest. 3T free lifting height reduces 465mm with backrest. 3.5T free lifting height reduces 465mm with backrest. 3.8T free lifting height reduces 445mm with backrest.